Short Paper

A Combination of 3D Data to Reconstruct the Archaeological Features

3D Models of the Burials of the Necropolis of Piovego (PD, Italy)

Francesca ADESSO, Department of Cultural Heritage, University of Padua, Padova Italy
Emanuela FARESIN, Department of Cultural Heritage, University of Padua, Padova Italy
Giuseppe SALEMI, Department of Cultural Heritage, University of Padua, Padova Italy

Keywords: *Models—Virtual Archaeology—Iron Age—Virtual Reconstruction—3D Archaeology*

CHNT Reference: Adesso, F., Faresin, E. and Salemi, G. (2025). 'A Combination of 3D Data to Reconstruct the Archaeological Features: 3D Models of the Burials of the Necropolis of Piovego (PD, Italy)', *Proceedings of the 26th International Conference on Cultural Heritage and New Technologies,* Vienna and online, November 2021. Heidelberg: Propylaeum.
doi: 10.11588/propylaeum.1449.c20733.

Introduction

The potential of 3D technologies in archaeology and in general for Cultural Heritage was already clear when pioneering works were carried out in the 1990s. Due to increasingly powerful and sophis ticated devices, applications in the archaeological field have exponentially increased until the creation of a specific branch of the discipline called "Virtual Archaeology" (Reilly, 1990) and the specific definition of "3D Archaeology" (Daniels, 1997).

This kind of method offers specialists a different study perspective, overcoming the limits of traditional 2D approaches and, at the same time, being a powerful means of visualizing the past and making non-specialists understand the often-fragmented archaeological data. In addition to that, the 3D reconstruction could be used to create a digital archive implementable when new data occurs and is always available to scholars, specialists, and students.

Methods and sample

All the burials of the sample were part of the necropolis of Piovego; this necropolis was located in the East of the modern city of Padua (Italy), and it was developed from the end of the sixth century BC until the beginning of the fourth century BC and was excavated between 1963 and 1988/89 (Calzavara Capuis and Leonardi, 1976a, 1976b). The three burials presented in this paper were discovered and excavated in 1976; both burials 2 and 14 were cremations in dolium while burial 22 was a cremation pit.

In the last decades, these burials have been studied with a processual approach by Prof Giovanni Leonardi and his Team at the Dept of Cultural Heritage of the University of Padua: these studies aimed to recover the original funerary codes through the recognition of post-depositional movements (Leonardi, 1986). Recently, some of these burials were analysed with 3D techniques (Computed

Tomography, Laser scanner, Stereoscopy, and Geographic Information System) but 3D reconstructions had never been used before to reproduce the entire burials with all their features as these appear at the time of deposition.

For this research, it has been used both 3D modelling and 3D scanning techniques to develop digital models of Iron Age burials with their respective grave goods.

Results and discussion

The principal object of this research was to recover in all three dimensions the correct topological relationships between the finds. Furthermore, for each burial, there were some issues to confirm concerning the position of specific elements and the presence of objects in perishable material like wooden support or textiles.

Specifically, for burial 2 the correct position of the urn and the presence of some supports in perishable materials (like textiles or wood) had to be verified. For burial 14, a reconstruction of the appearance of the “dressed” urn had to be attempted. The burial 22 was the most complex case because there have been massive post-deposition movements in the pit. The presence of perishable support on which part of the grave goods was placed was hypothesized; finally, the limits of the pit had not been recognized during the excavations.

First, the documentation of excavation, like notes and photos, was examined as well as all 2D graphic data. Then was decided to use two different methods to acquire the finds: the vessels and the perishable materials were 3D modelled while the other finds have been acquired with a 3D scanner.

For vessel modelling the digital 2D drawings were imported into Rhinoceros.

To create dimensionally correct models of the vessels, it was used MeshLab. For the parametrization, it was used a scale factor which allows assigning the real scale to the mesh.

The other kinds of objects as metallic and glass finds were acquired by a structured-light 3D scanner, the Cronos Dual of Open Technologies (now Faro rebranded) with these technical characteristics: accuracy: 0.10 ÷ 0.40 mm; camera resolution: 2x1.3 MPixels. The scanner has a rotating platform supplied with a step-by-step motor programmed to rotate at fixed angles. The finding was placed on therotating platform on different faces and acquired with different calibrations, if necessary, to obtain the entire volume of the object.

The last step of the workflow was the assemblage of all 3D models, simulating the structure of the burials: this phase was handled using Blender. This software was used to import and arrange all 3D models of grave goods of every single burial; the positioning of the 3D models has been guided by 2D graphic reconstructions which have been used as background. The tools of this software were also used to freely model both the geometry of the perishable support of burial 22 and the fabric was wrapped around the urn of burial 14. When cases of overlap or intersection between the items occurred, the 3D models shifted along three axes to assign to them a correct position (Figure 1).

For burial 2, the previous studies suggested two different ways to position the urn inside the dolium and both have been tested in the 3D models; in this way, it was verified that the correct hypothesis was the one, it required support in perishable material that measures at least 5 cm in height positioned under the urn (Figure 2A).

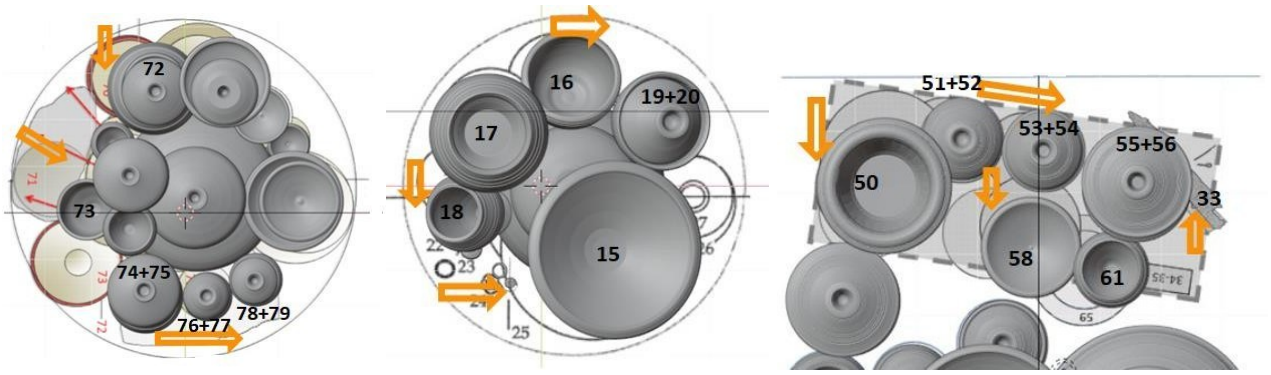

a b c

Fig. 1. The correct positions of the vessels respect the 2D reconstruction. The arrows indicate the direction of the re- positioning. a) burial 2. b): burial 14. c): burial 22 (© Adesso F).

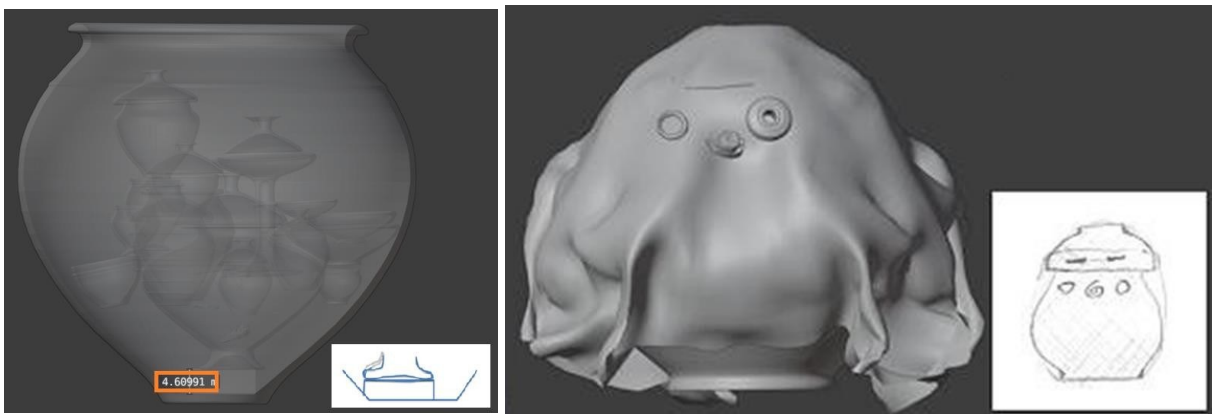

a b

Fig. 2. The perishable elements of the burials: the 3D models and the respective 2D graphic reconstructions. a) thesupport under the urn of the burial 2. b) A simulation of the appearance of the urn wrapped in textile of the burial 14. (© Adesso F).

During the excavation of burial 14, several decorative finds were located at the same quota in the dolium near the urn indicating the possible presence of a fabric that has not been preserved (Gleba, 2016). Using Blender, it was possible to create a hypothetical replica of the textile that wrapped the urn (Figure 2B).

The discovery of some vessels at the highest quota during the excavation of burial 22 has been interpreted as the original existence of support inside the pit used for the arrangement of the grave goods. The 3D model of this burial allowed us to simulate the shape and dimensions of this support and to measure the minimum length of the sides of the burial pit (84x87 cm), considering the virtual area occupied by the object (Figure 3).

Potential application of 3D models of the burials

All kinds of archaeological excavations are destructive events that have effects on the entirety of the site. The excavation of graves often occurs in emergencies where you must work quickly. Sometimes the excavation involves the removal of entire stratigraphies, like when the burials are taken with blocks of sediment to allow an excavation in the laboratory, as happened to the graves of Piovego.

Rarely it is possible to create a formal exhibition of the burials and their grave goods in their places of discovery also because they are in an urban context. The finds are moved for many reasons like

research and restoration; in some cases, they are placed in the context of a museum but can occur, due to lack of funding or suitable locations, they are stored in warehouses.

The creation of digital models allows the creating of databases that fix the state of the archaeological findsat the time of their acquisition. The use of these databases allows recovery of the geometry and all features of the find, even if the entire object has been lost or partially destroyed (i.e. for natural calamities or anthropic damage).

The use of such a database can simplify the research on necropolises; the researchers can derive three-dimensional information whenever and wherever they need to recover the grave goods of this kind of cemetery.

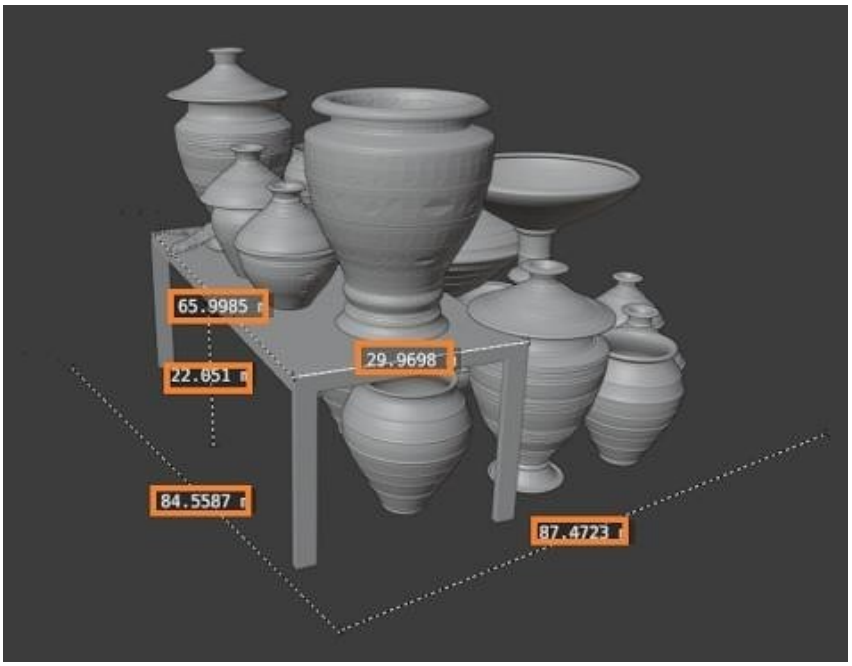

Fig. 3. The metrics of the pit (84x87 cm) and the perishable support of the burial 22 (66x30x22 cm) (© Adesso F).

Conclusions

The development of these burials in a 3D environment permitted the creation of an effective tool for the research, which allows to review 2D reconstructions and to formulate new theories with a topological correct arrangement of the burials. Specifically, this research has confirmed the original positions of the grave goods, furthermore, the correct spatial relationships between the objects of the grave goods in a 3D environment were verified. Furthermore, it allowed postulation of the shape, appearance, and metrics of the objects in perishable materials like the support under the urn in burial 2, the textiles in burial 14 and the rectangular support in burial 22. These kinds of finds are rarely preserved in archaeological records because they need a specific chemical and climatic condition for optimal preservation. In this way, it was obtained the spatially correct 3D models of all features of burials. Thus, these tools have been proven useful to provide a new complete visual of an archaeological reality often fragmentary and hard to understand.

Funding

This research received no specific grant for any funding agency in the public, commercial, or not-for-profit sectors.

Conflict of Interests Disclosure

The Authors declare that there is no conflict of interest.

Author Contributions

Conceptualization: Francesca Adesso; Giuseppe Salemi.
Data curation: Francesca Adesso; Emanuela Faresin.
Formal Analysis: Emanuela Faresin; Francesca Adesso.
Investigation: Francesca Adesso.
Methodology: Francesca Adesso; Giuseppe Salemi.
Project Administration: Giuseppe Salemi.
Supervision: Emanuela Faresin; Giuseppe Salemi.
Validation: Francesca Adesso; Emanuela Faresin; Giuseppe Salemi.
Visualization: Francesca Adesso.
Writing – original draft: Francesca Adesso.
Writing – review & editing: Emanuela Faresin; Giuseppe Salemi.

References

Calzavara, Capuis L. and Leonardi, G. (1976a). 'Necropoli del Piovego', in *Studi Etruschi XLVI*, pp. 171–174.

Calzavara, Capuis L. and Leonardi, G. (1976b). 'Padova, località S. Gregorio: necropoli paleoveneta del Piovego', in *Rivista di Archeologia III,* pp. 137–141.

Daniels, R. (1997). 'The need for the solid modelling of structure in the archaeology of buildings', *Internet Archaeology, 2 (2.3).*

Gleba, M. (2016). 'Wrapped up for safe keeping: 'wrapping' customs in Early Iron Age Europe', in *Wrapping and Unwrapping Material Culture*, pp. 135–146.

Leonardi, G. (1986). ' Procedure di stratigrafia processuale: la necropoli paleoveneta del Piovego a Padova', in *Aquileia Nostra LVII*, pp. 210–235.

Reilly, P. (1990). Towards a virtual archaeology in *Computer Applications in Archaeology*, pp. 133–139.